DeFelt®

GridVibe™

Acoustic T-Grid Ceiling Panels

260914

Content

01 Collection Overview

02 Collection List

03 Product Details

04 Collection Data Sheet

05 Colors & Patterns

06 Ordering

01 Collection Overview

GridVibe™

Acoustic Ceiling T-Grid Baffles are designed to improve sound comfort and reduce unwanted reverberation in interiors.

GridVibe™ Ceiling combines effective sound absorption with lightweight modularconstruction and contemporary design. Easy to assemble and install, the system provides an effective acoustic solution for offices, meeting rooms, hospitality spaces, restaurants, retail & other commercial environments.

Why GridVibe™?

- Reduces reverberation and unwanted noise.
- Helps create more comfortable environments for work, communication and concentration
- Made from recycled Acoustic PET Felt
- Modular, lightweight construction for easy installation
- Designed to combine acoustic performance with contemporary aesthetics
- Available in a wide range of colours and configurations
- Created with a focus on quality, durability & sustainability

Origin

GridVibe™ was created in response to a simple challenge: "How can we significantly improve the acoustics of an existing interior without redesigning the entire space?". The ceiling provides a large, often unused surface for acoustic treatment. GridVibe™ transforms this space into an effective sound-absorbing system while simultaneously adding a distinctive architectural element.

The GridVibe™ Acoustic Ceiling Collection was developed to give architects and designers the freedom to combine acoustic performance, modularity and visual expression in commercial interiors.

DeFelt Sp. z o.o., Rakietowa st. 35, 54-615 Wrocław, Poland | contact@defelt.com | +48 666 608 889

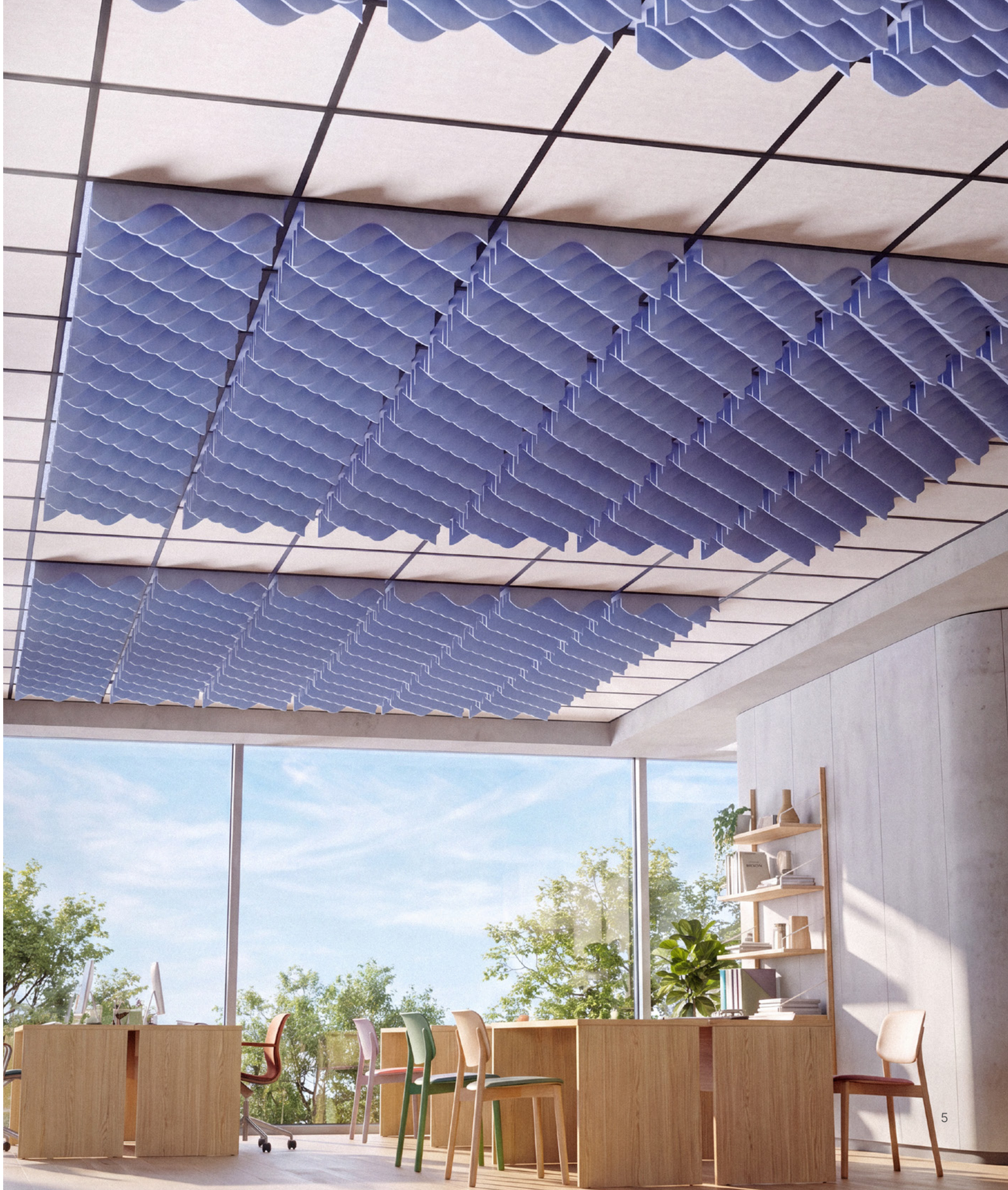

GridVibe™

①

The GridVibe collection is compatible with most standard ventilation and lighting systems.

②

Combine GridVibe with other DeFelt collections - discover the LookUp collection and complete your ceiling design!

③

Choose from a wide range of felt enhancements - discover TwinFelt, FeltBlend, CorkFeltFusion, or wood prints WoodEcho.

④

Easy to install or rearrange.

DeFelt Sp. z o.o., Rakietowa st. 35, 54-615 Wrocław, Poland | contact@defelt.com | +48 666 608 889

GridVibe™

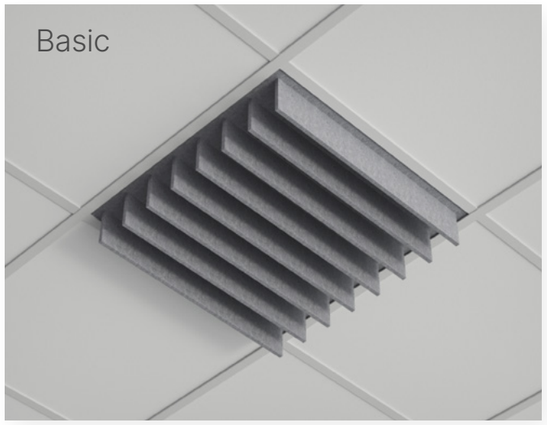

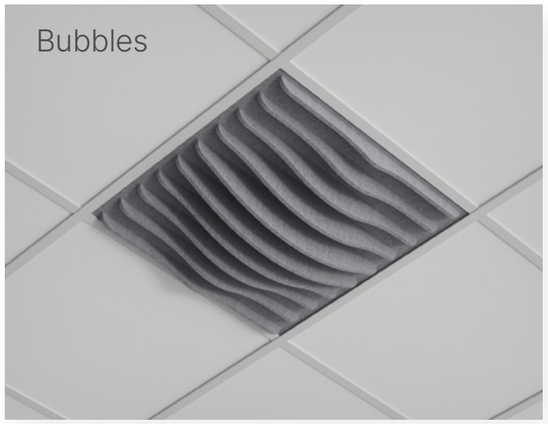

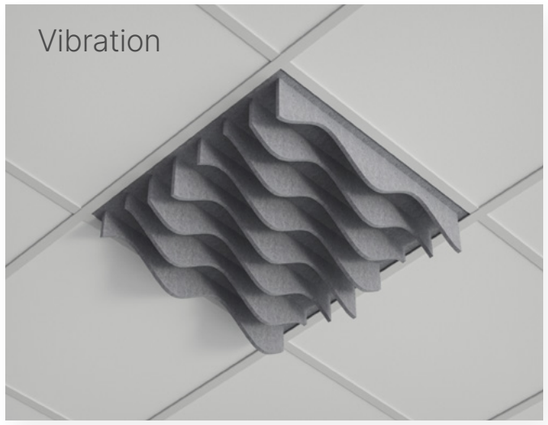

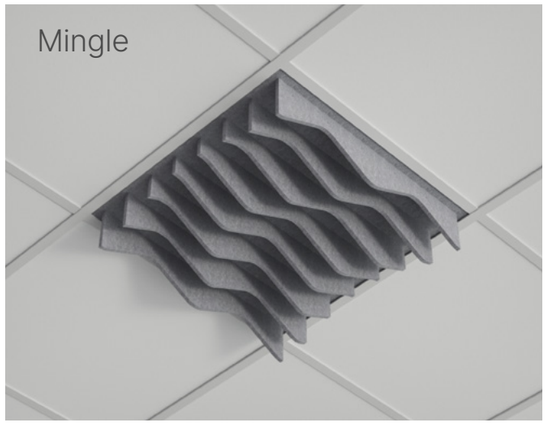

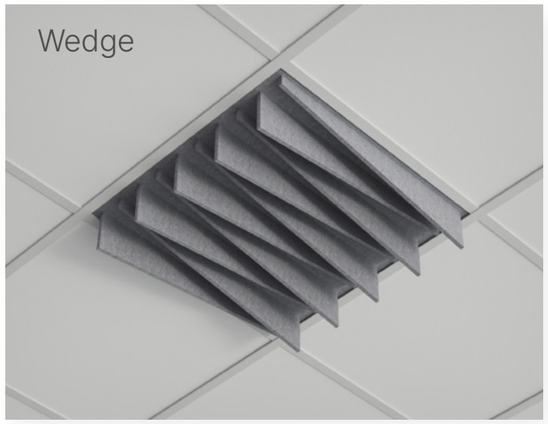

Go to DeFelt's Website

Explore Our Products & Felt Samples!

www.defelt.com

Discover more about Our products and materials at www.defelt.com

GridVibe™

Basic

Ceiling baffle panels featuring simple lamellas that significantly enhance the acoustic comfort and overall performance of your interior.

- Find more at: www.defelt.com

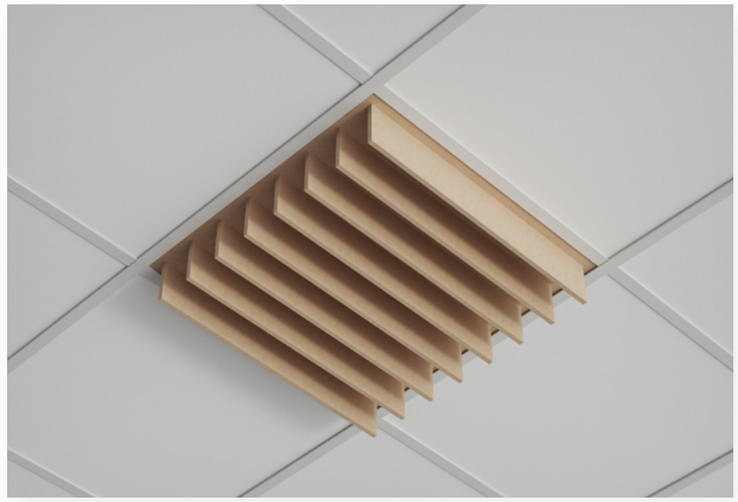

Product Views:

Rotate, rearrange all the slats, and play with colors.

Every GridVibe™ collection pattern is fully compatible with the LookUp™ collection.

- More at: www.defelt.com or @_defelt_ on Instagram

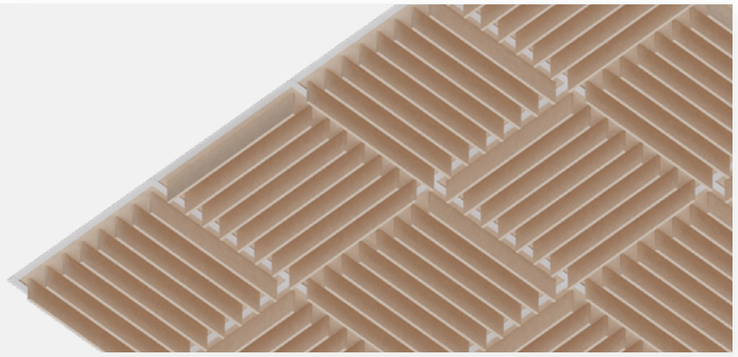

Dimensions

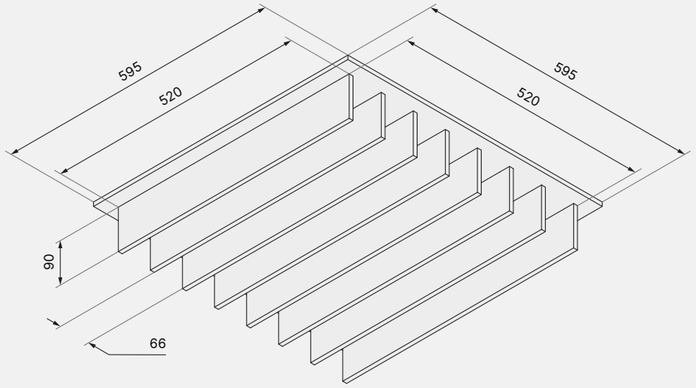

- Dimension in [mm].

In the set:

In a box:

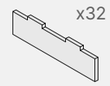

x32

Acoustic Lamellas

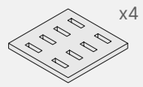

x4

Baffle Base

Online:

Guides

2-Year Warrianty

- Ask our Sales Team for more information.

Rounded

Featuring simple lamellas with softly rounded edges to create seamless appearance while significantly improving comfort of any interior.

- Find more at: www.defelt.com

Product Views:

Rotate, rearrange all the slats, and play with colors.

Every GridVibe™ collection pattern is fully compatible with the LookUp™ collection.

- More at: www.defelt.com or @_defelt_ on Instagram

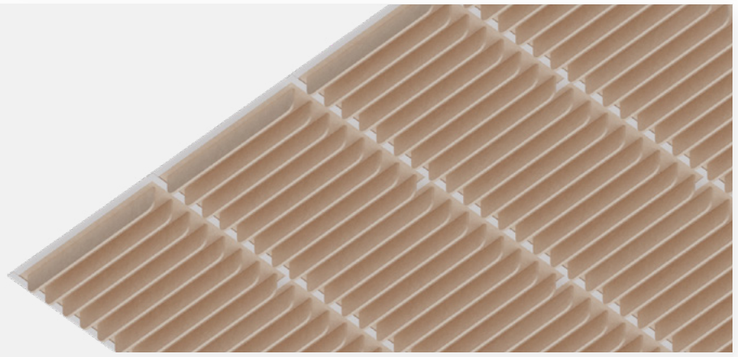

Dimensions:

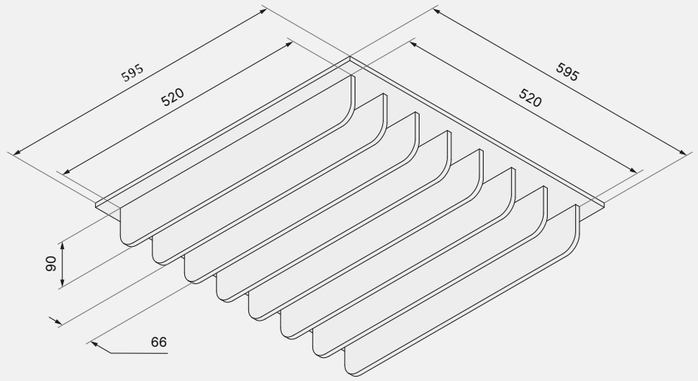

- Dimension in [mm].

In the set:

In a box:

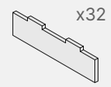

x32

Acoustic Lamellas

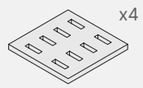

x4

Baffle Base

Online:

Guides

2-Year Warrianty

- Ask our Sales Team for more information.

Wedge

Designed with trapezoidal lamellas, these ceiling baffle panels create crisp, geometric lines that add depth and character to any ceiling while enhancing acoustic comfort.

Find more at: www.defelt.com

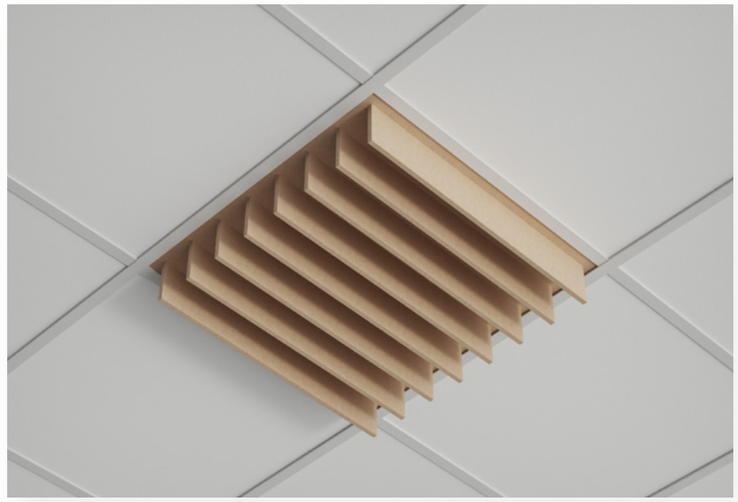

Product Views:

Rotate, rearrange all the slats, and play with colors.

Every GridVibe™ collection pattern is fully compatible with the LookUp™ collection.

More at: www.defelt.com or @_defelt_ on Instagram

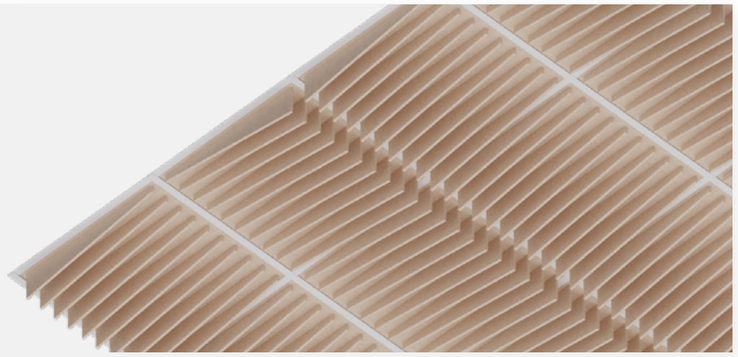

Dimensions

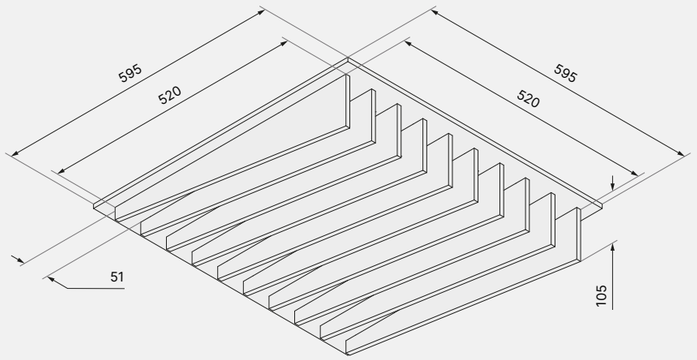

Dimension in [mm].

In the set:

In a box:

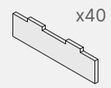

x40

Acoustic Lamellas

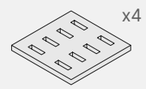

x4

Baffle Base

Online:

Guides

2-Year Warrianty

Ask our Sales Team for more information.

GridVibe™

Concave

Featuring smooth, sculpted waves, these ceiling baffle panels add depth and rhythm to the ceiling, creating a distinctive architectural expression while adding excellent acoustic performance.

Find more at: www.defelt.com

Product Views:

Rotate, rearrange all the slats, and play with colors.

Every GridVibe™ collection pattern is fully compatible with the LookUp™ collection.

More at: www.defelt.com or @_defelt_ on Instagram

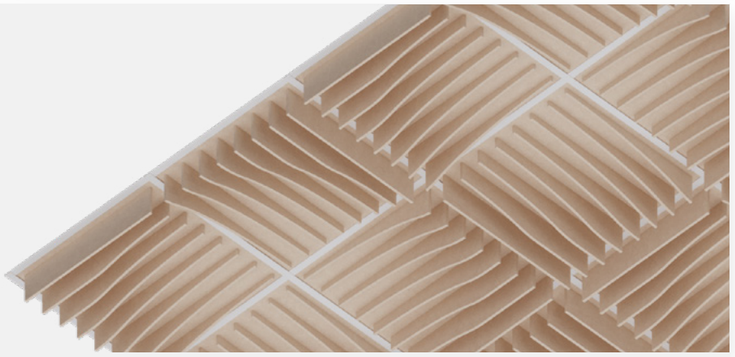

Dimensions:

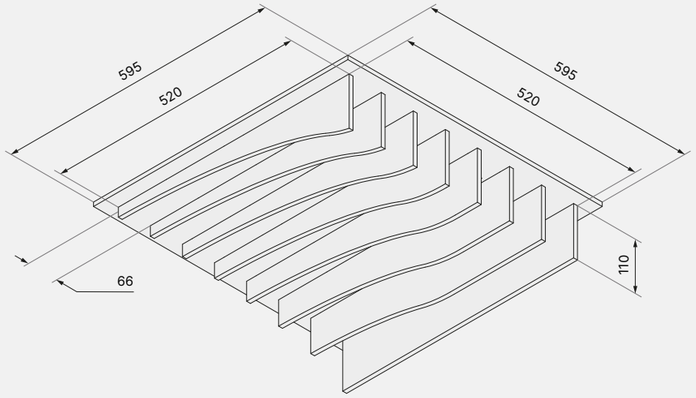

Dimension in [mm].

In the set:

In a box:

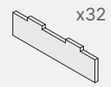

x32

Acoustic Lamellas

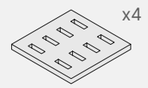

x4

Baffle Base

Online:

Guides

2-Year Warrianty

Ask our Sales Team for more information.

GridVibe™

Harmony

Inspired by the natural flow of the waves, these baffle panels bring a sense of harmony and movement to any interior.

The fluid pattern creates a soft rhythm that adds lightness and character to the ceiling.

Find more at: www.defelt.com

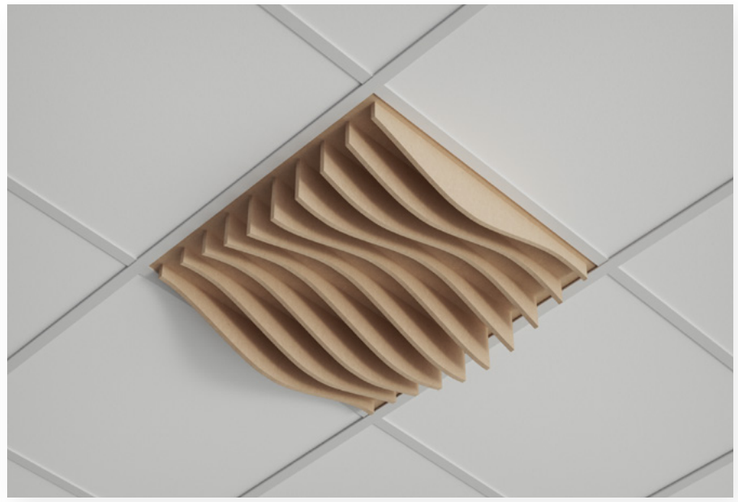

Product Views:

Rotate, rearrange all the slats, and play with colors.

Every GridVibe™ collection pattern is fully compatible with the LookUp™ collection.

More at: www.defelt.com or @_defelt_ on Instagram

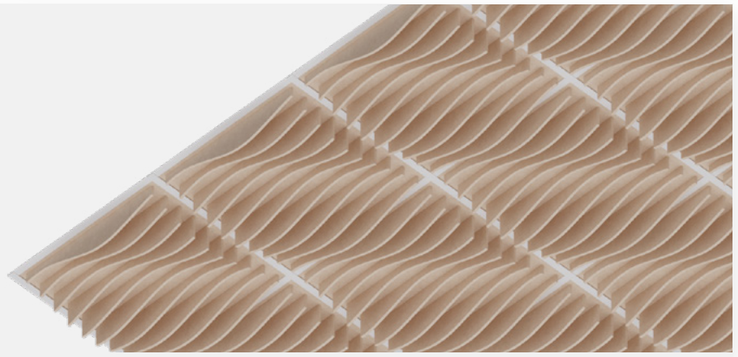

Dimensions:

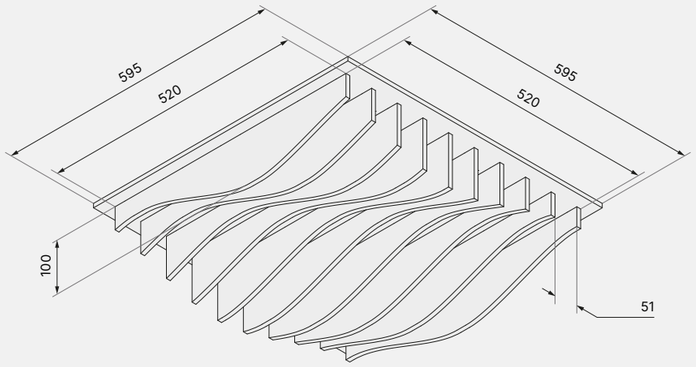

Dimension in [mm].

In the set:

In a box:

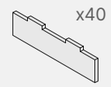

x40

Acoustic Lamellas

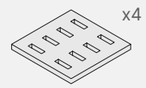

x4

Baffle Base

Online:

Guides

2-Year Warrianty

Ask our Sales Team for more information.

GridVibe™

Bubbles

Create smooth, sculpted wave forms that introduce depth and rhythm to the ceiling, forming a distinctive architectural expression inspired by bubbles, while delivering high acoustic performance.

Find more at: www.defelt.com

Product Views:

Rotate, rearrange all the slats, and play with colors.

Every GridVibe™ collection pattern is fully compatible with the LookUp™ collection.

More at: www.defelt.com or @_defelt_ on Instagram

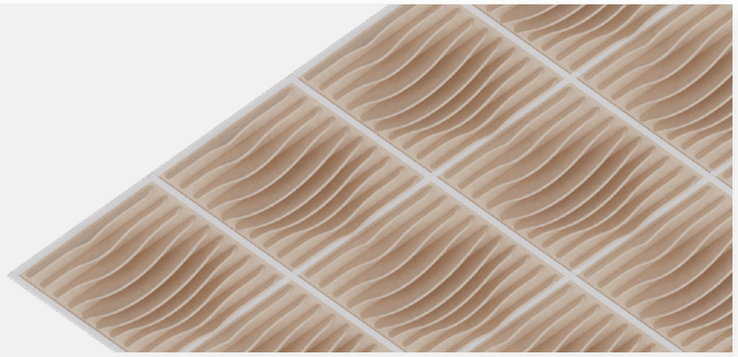

Dimensions:

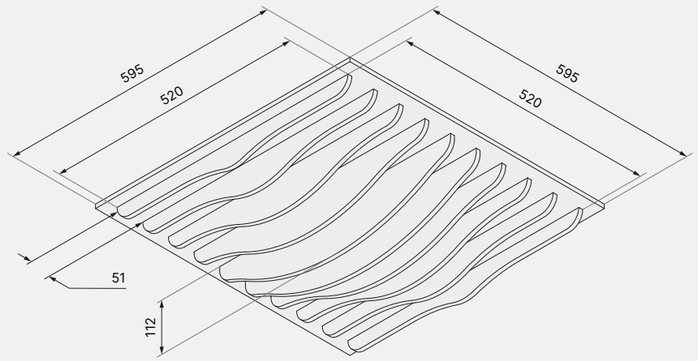

Dimension in [mm].

In the set:

In a box:

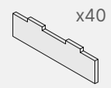

x40

Acoustic Lamellas

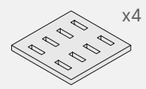

x4

Baffle Base

Online:

Guides

2-Year Warrianty

Ask our Sales Team for more information.

DeFelt Sp. z o.o., Rakietowa st. 35, 54-615 Wrocław, Poland | contact@defelt.com | +48 666 608 889

Infinity

Ceiling baffle panels with a simple flexible, free-flowing pattern, they allow for the creation of a wide variety of layouts, offering both visual rhythm and high acoustic performance.

Find more at: www.defelt.com

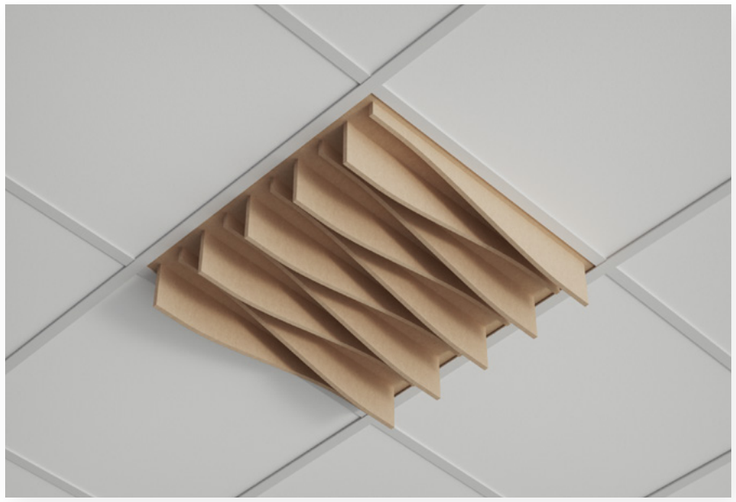

Product Views:

Rotate, rearrange all the slats, and play with colors.

Every GridVibe™ collection pattern is fully compatible with the LookUp™ collection.

More at: www.defelt.com or @_defelt_ on Instagram

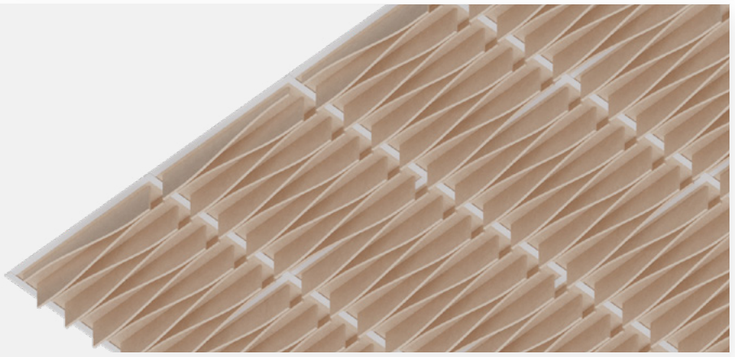

Dimensions:

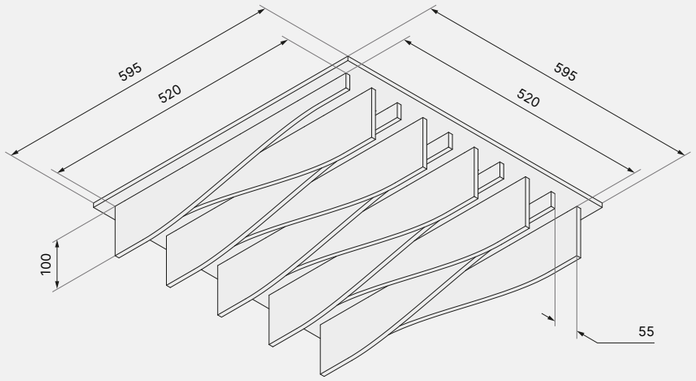

Dimension in [mm].

In the set:

In a box:

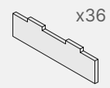

x36

Acoustic Lamellas

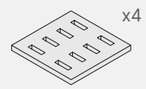

x4

Baffle Base

Online:

Guides

2-Year Warrianty

Ask our Sales Team for more information.

GridVibe™

Hills

Ceiling baffle panels with a simple flexible, free-flowing pattern, they allow for the creation of a wide variety of layouts, offering both visual rhythm and high acoustic performance.

Find more at: www.defelt.com

Product Views:

Rotate, rearrange all the slats, and play with colors.

Every GridVibe™ collection pattern is fully compatible with the LookUp™ collection.

More at: www.defelt.com or @_defelt_ on Instagram

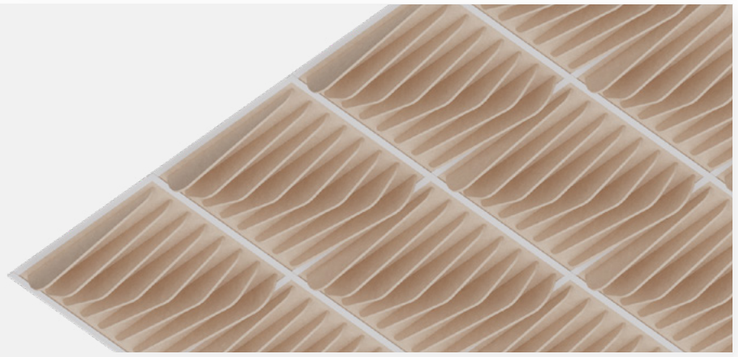

Dimensions:

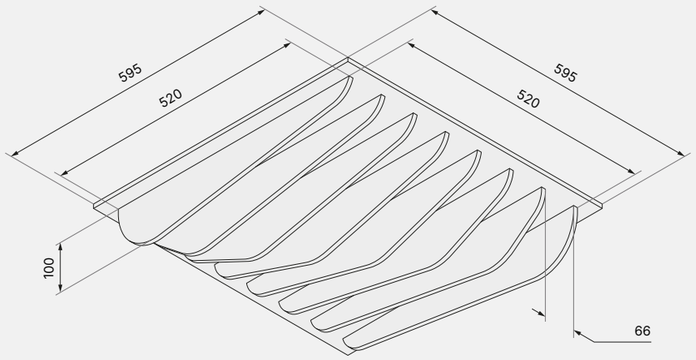

Dimension in [mm].

In the set:

In a box:

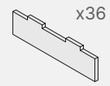

x36

Acoustic Lamellas

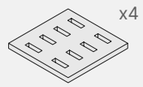

x4

Baffle Base

Online:

Guides

2-Year Warrianty

Ask our Sales Team for more information.

GridVibe™

Vibration

Ceiling baffle panels with decorative lamellas overlapping like fish scales, creating a subtle vibrating visual effect.

They create rhythm and depth, support flexible layouts, and ensure high acoustic performance.

Find more at: www.defelt.com

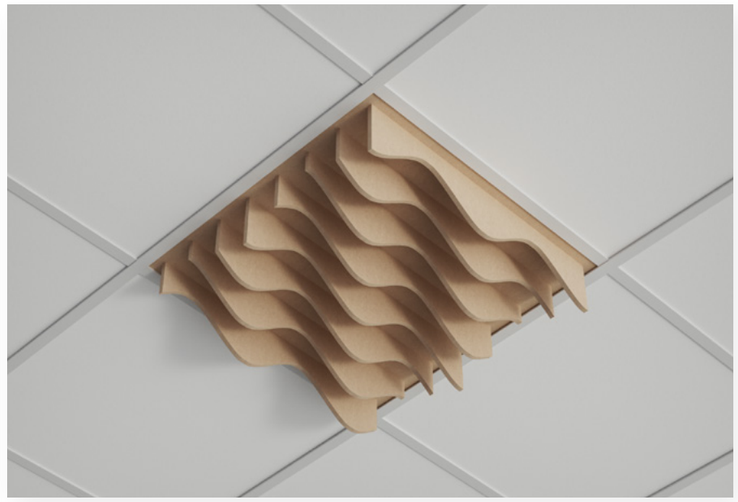

Product Views:

Rotate, rearrange all the slats, and play with colors.

Every GridVibe™ collection pattern is fully compatible with the LookUp™ collection.

More at: www.defelt.com or @_defelt_ on Instagram

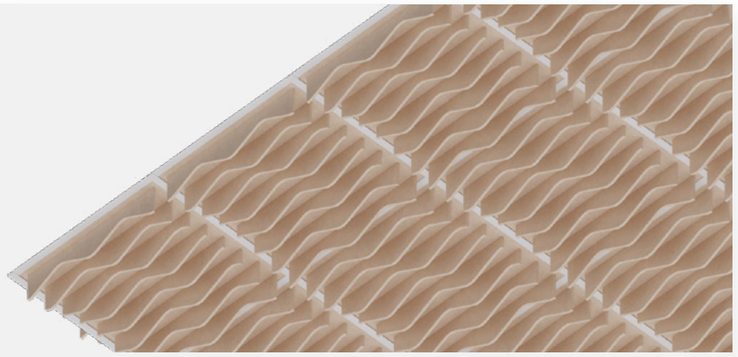

Dimensions:

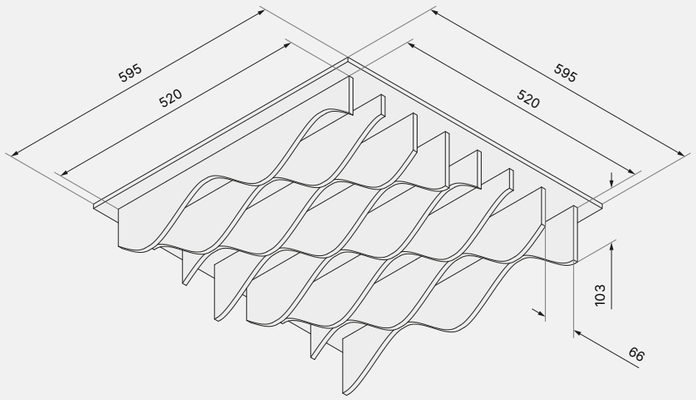

Dimension in [mm].

In the set:

In a box:

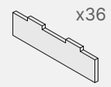

x36

Acoustic Lamellas

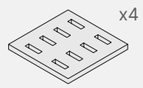

x4

Baffle Base

Online:

Guides

2-Year Warrianty

Ask our Sales Team for more information.

GridVibe™

Mingle

Ceiling baffle panels with overlapping decorative lamellas that create a vibrant pattern full of character and dynamism. The design introduces depth and rhythm to the space and delivers excellent acoustic performance.

Find more at: www.defelt.com

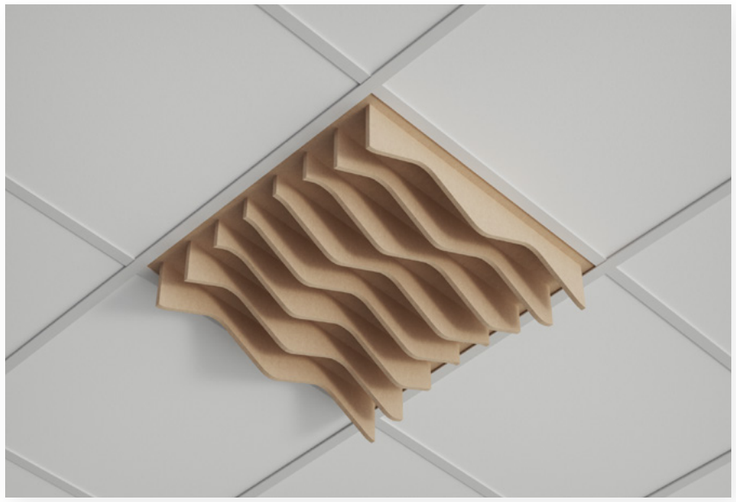

Product Views:

Rotate, rearrange all the slats, and play with colors.

Every GridVibe™ collection pattern is fully compatible with the LookUp™ collection.

More at: www.defelt.com or @_defelt_ on Instagram

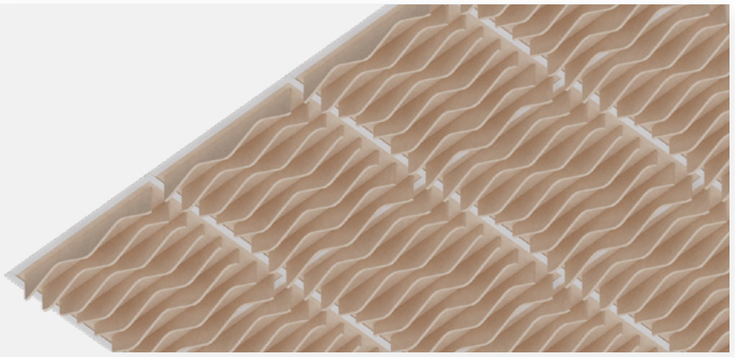

Dimensions:

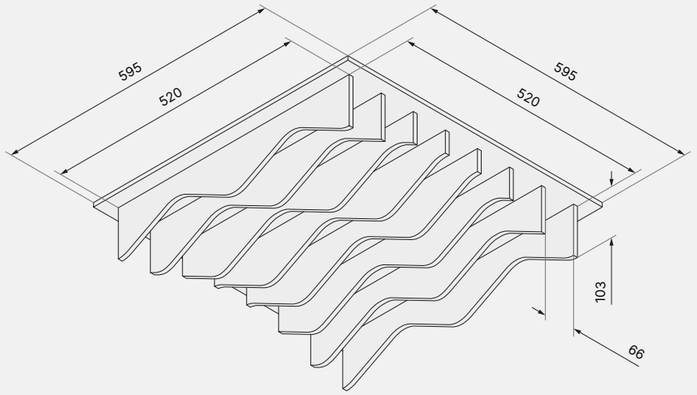

Dimension in [mm].

In the set:

In a box:

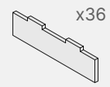

x36

Acoustic Lamellas

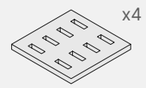

x4

Baffle Base

Online:

Guides

2-Year Warrianty

Ask our Sales Team for more information.

04 Collection Data Sheet

In the set:

In a box:

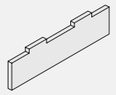

Acoustic Lamellas

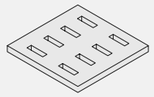

Baffle's Base

Available online:

Product Features:

Recyclable

VOC free

Ventilated

Acoustical

Insulated

Easy to cut

Lightweight

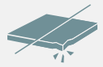

Shatterproof

Buffered

Product:

Avaliable sizes	4 pcs of 595 x 595 mm | **Standard** · 2 pcs of 1195 x 595 mm | **Wide**
Material	**100% PET** (65% from recycled plastic bottles)
Fire Rating	In accordance with PN-EN 13501-1:2019-02, Reaction to Fire Classification Fire-Rated Panels | **B-s1; d0** · Regular Panels | **C-s2; d0**
Custom Option	● Available upon request
Lead Time	In stock for immediate shipment
VOC Emissions	US EPA 5021A:2003 analysis was performed by HS - GS - MS. CAS № 75-25-2: VOC 0,0001% · CAS № 110-54-3: VOC 0,0005% CAS № 71-43-2: VOC 0,0005% · CAS № 100-42-5: VOC 0,0005%

● Actual lead times are determined when the project goes into production and can change based on production schedule and all quantities, color and thicknesses being in stock at time of order. See DeFelt Product Lead Time Disclosure for more information.

05 T-Profile Information

GridVibe™

About:

EU T-Grid Compability

The GridVibe™ Collection is designed for standard suspended T-grid ceiling systems with 600 × 600 mm for Standard or 600 × 1200 mm for Wide modules. GridVibe™ modules have nominal dimensions of 595 × 595 mm (1195 × 595 mm) to fit within the ceiling grid. This compatibility enables quick installation and provides a high degree of design flexibility. GridVibe™ modules can be positioned alongside compatible lighting fixtures, ventilation, air-conditioning and other ceiling services without modification of the existing ceiling structure.

US T-Grid Compatibility

The standard suspended ceiling grid in the United States is based on a nominal 24 × 24-inch (609.6 × 609.6 mm) for Standard modules. The actual lay-in ceiling tile is usually slightly smaller - typically approximately 23¾ × 23¾ inches (603 × 603 mm) for Standard modules - depending on the grid manufacturer and profile. GridVibe™ is available in two dedicated formats: European version: for 600 × 600 mm T-grid systems US version: for 24 × 24-inch T-grid systems the exact dimensions should always be confirmed against the technical specifications of the selected ceiling grid before ordering. Next to compatible lighting fixtures, air-conditioning systems, and other ceiling installations, without the need to interfere with the existing ceiling structure.

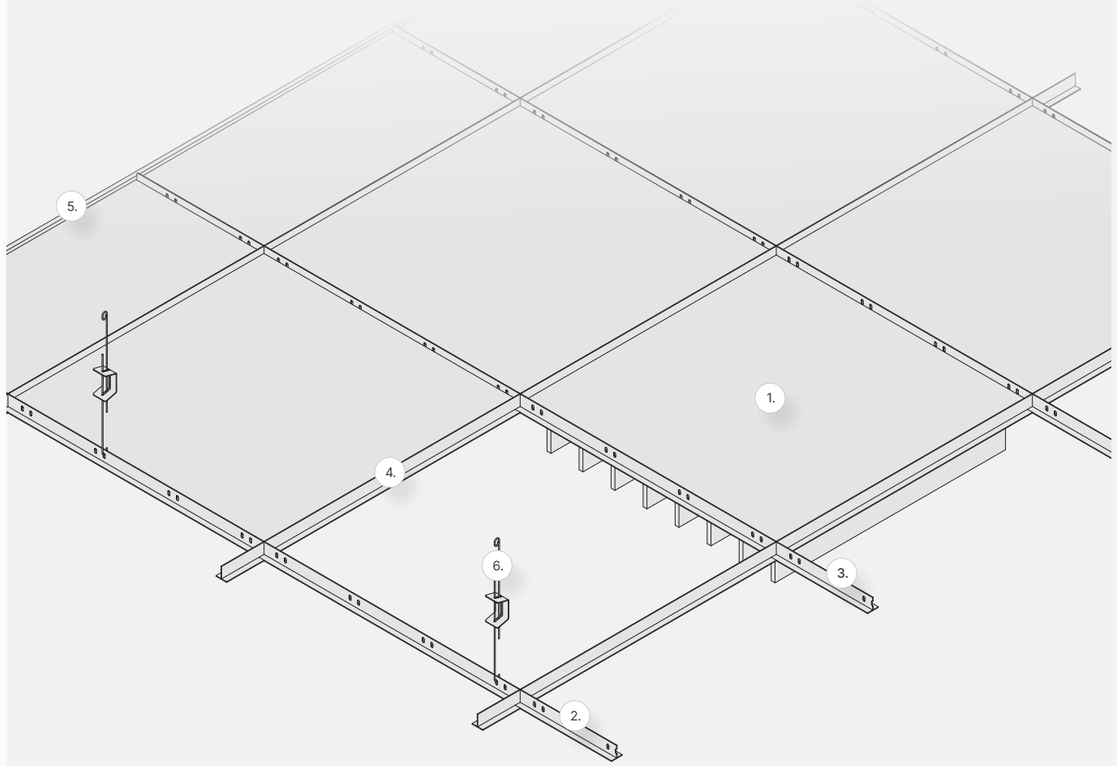

1. | **Suspended DeFelt's Acoustic Ceiling T-Grid Panel** · 2. | Main T-profile · 3. | Longitudinal T-profile · 4. | Transverse T-profile · 5. | L-profile or W-profile for wall mounting · 6. | Suspension (hook eye wire, wires, expansions springs, etc.)

● Ask Our Sales Team for more information.

GridVibe™

Acoustic PET Felt Colors

Avaliable Color Palette of Acoustic PET Felt

Common White DF-01	**Pure Milk** DF-02	**Coconut White** DF-03	**Dark Jute** DF-04	**Creamy Honey** DF-05	**Zara Beige** DF-06
Cotton Grey DF-07	**Koala Grey** DF-08	**Smoke Grey** DF-09	**Maestro Grey** DF-10	**Moon Grey** DF-11	**Dark Truffle Grey** DF-12
Nardo Grey DF-13	**Intense Grey** DF-14	**Graphite Black** DF-15	**Common Black** DF-16	**Powder Blue** DF-18	**Baby Bean** DF-19
Grey Olive Green DF-24	**Night Blue** DF-30	**Jungle Green** DF-31	**Denim Blue** DF-32	**Autumn Orange** DF-52	**Sesame Yellow** DF-53
Peanut Brown DF-57	**Cocoa Powder** DF-58	**Rust Brown** DF-59	**Sand Grey** DF-69	**Moss Green** DF-70	**Matte Green** DF-71
Royal Blue DF-72					

GridVibe™ is available in 31 standard colours presented in this brochure.

For larger projects, the collection can be produced in any of the 72 DeFelt® PET Felt colours. Before placing an order, please request our complete PET Felt Colour Catalogue to explore the full range of available colours. For colours not included in the standard GridVibe™ range, the minimum order quantity (MOQ) is 48 packs / 69,12 m2 / 192 GridVibe™ modules - equivalent to one Euro pallet.

(!) Keep in mind that the colors of PET felts and fabrics may vary slightly from what you see in the catalog.

For the most accurate representation, we recommend referring to our sample book or individually supplied samples. Due to the production process of both fiber and PET felt, there may be slight variations in material between different production batches. Additionally, please take into consideration that PET panels have distinct front and back sides, so always use the same side of the sheet within one installation.. Due to the manufacturing process, the felt board may show differences in shade depending on the direction of laying. We recommend laying all pieces in one direction to avoid undesirable visual effects. This is particularly important to consider when installing larger structures, such as wall-mounted panels or acoustic drop ceiling.

WoodEcho™

WoodEcho texture printed on Acoustic PET Felt

Nordic Blonde on Coconut White
PWE-01 print on DF-03 felt base

Nordic Maple on Coconut White
PWE-03 print on DF-03 felt base

CorkFeltFusion™

CorkFeltFusion layer laminated on Acoustic PET Felt

Plain Cork on Zara Beige CF-007PC & DF06	**Soft Cork on Zara Beige** CF-20SC & DF06	**Mosaic Cork on Zara Beige** CF-30MC & DF06	**Swirl Cork on Zara Beige** CF-86CS & DF06
Plain Cork on Dark Jute CF-007PC & DF16	**Soft Cork on Dark Jute** CF-20SC & DF16	**Mosaic Cork on Common Black** CF-30MC & DF16	**Swirl Cork on Common Black** CF-86CS & DF16

FeltBlend™

One-side laminated Acoustic PET Felt with FeltFlow

Black-31 & DF33	Beige-44 & DF02	Beige-44 & DF58
Light Grey-35 & DF01	Light Grey-35 & DF17	Light Grey-35 & DF25
Light Grey-35 & DF56	Light Grey-35 & DF72	
Grey-34 & DF04	Grey-34 & DF57	Grey-34 & DF70
Grey-34 & DF72	Black-31 & DF31	Black-31 & DF12
Green-23 & DF34	Red-01 & DF64	

TwinFelt®

Double-side laminated Acoustic PET Felt with FeltFlow

Black-31 & DF33	Beige-44 & DF02	Beige-44 & DF58
Light Grey-35 & DF01	Light Grey-35 & DF17	Light Grey-35 & DF25
Light Grey-35 & DF56	Light Grey-35 & DF72	
Grey-34 & DF04	Grey-34 & DF57	Grey-34 & DF70
Grey-34 & DF72	Black-31 & DF31	Black-31 & DF12
Green-23 & DF34	Red-01 & DF64	

07 Ordering

Planning a Larger Project?

Before placing your order, ask our Sales Team for the complete DeFelt® PET Felt Colour Catalogue. In addition to the standard GridVibe™ colours shown in this brochure, GridVibe™ can be produced in 72 DeFelt® colours. MOQ for non-standard GridVibe™ colours: 48 packs | 69,12 m² | 192 modules | 1 Euro Pallet

Make a Order

Our team of consultants is ready to answer your questions. We strive to fulfill orders as quickly as possible, so we kindly ask for the most detailed description of your inquiries. We would be glad to guide you through the process of make an order.

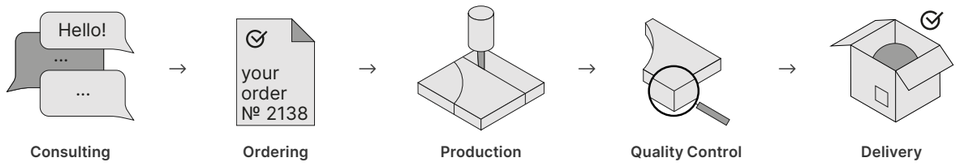

Digital Library

We maintain a library that offers a comprehensive range of data and detailed information about all our products. It is designed to help you find answers quickly and support you in making informed decisions.
We invite you to explore it here: *defelt.com/resource-library/*

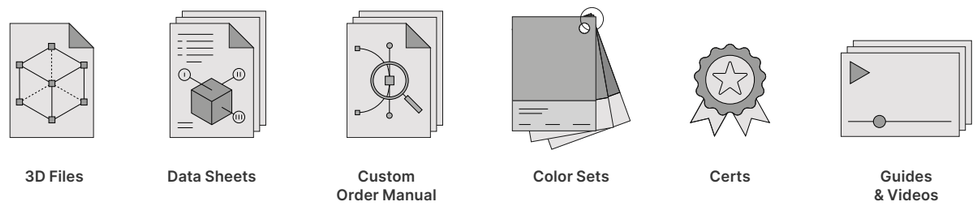

Contact Us!

We are here for you. You can reach us via email or by phone, and we will be happy to answer any questions you may have. Be sure to follow us on Instagram and LinkedIn as well!

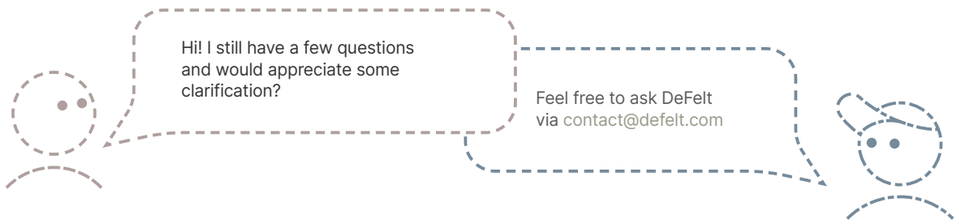

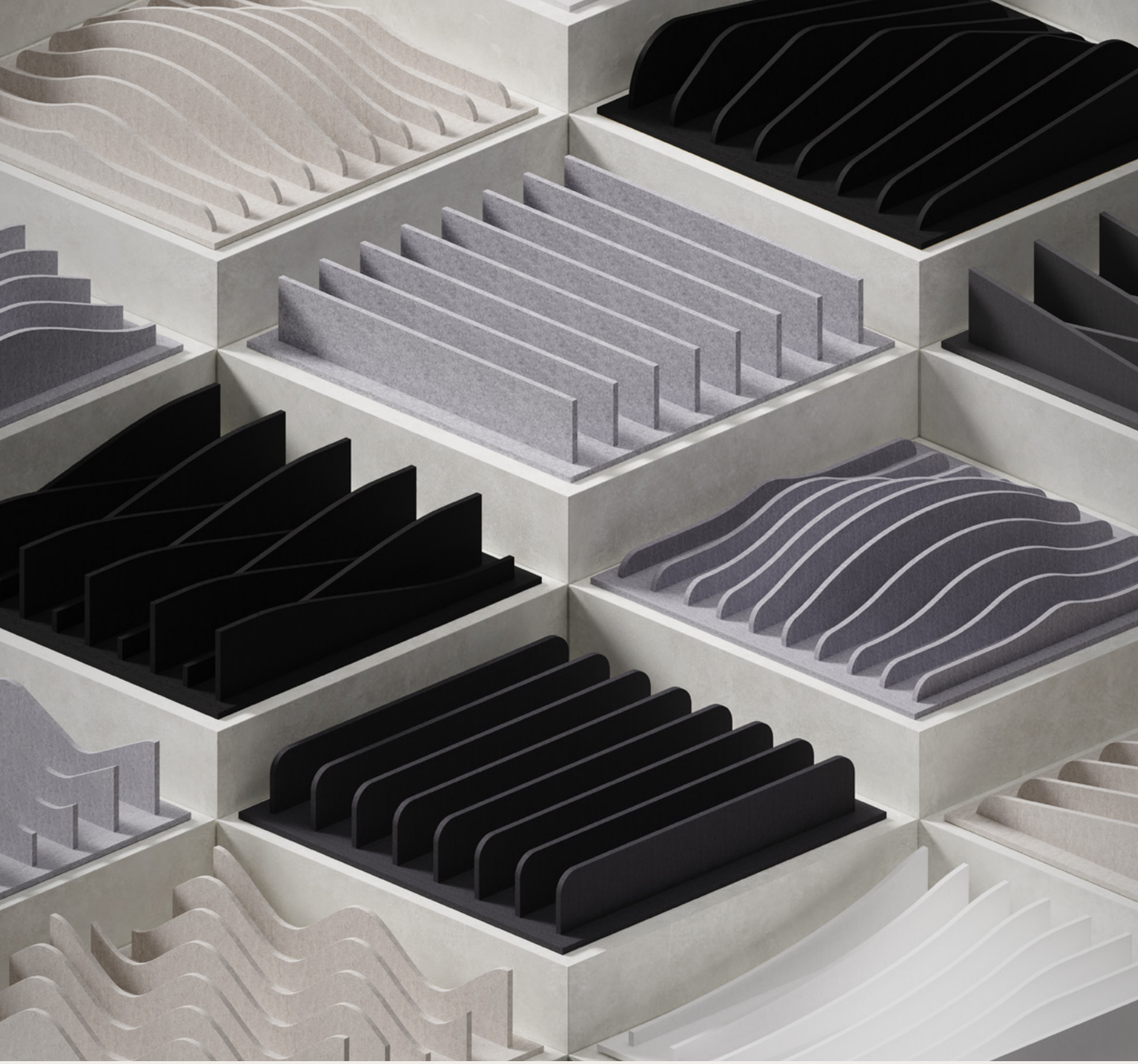

+48 666 608 889
contact@defelt.com
www.defelt.com

DeFelt Sp. z o.o.
ul. Rakietowa 35
54-615 Wrocław, Poland

DeFelt® and GridVibe™ are registered trademarks owned exclusively by DeFelt Sp. z o.o. The DeFelt® and GridVibe™ names, logos and trademarks may not be reproduced, used or distributed for commercial or other purposes without the prior written authorization of DeFelt Sp. z o.o. This brochure and its entire content are protected by copyright and other applicable intellectual property rights. This protection applies to the brochure as a whole as well as to each of its individual elements, including, without limitation, text, photographs, images, renderings, visualizations, product applications, drawings, graphics, layouts, product designs and other design elements. No part of this brochure may be copied, reproduced, modified, distributed, published, used or otherwise exploited, in whole or in part, by any means, without the prior written permission of DeFelt Sp. z o.o. DeFelt has made every reasonable effort to ensure that the information contained in this brochure is accurate. However, DeFelt accepts no responsibility for errors or omissions. DeFelt reserves the right to make technical, material, dimensional or aesthetic modifications and improvements to its products at any time without prior notice.

Please note that the colors of PET, felts, and fabrics may vary slightly from what you see in the catalog. For the most accurate representation, we recommend referring to our samples book or samples individually sent. Due to the production process of both fiber and PET felt, there may be slight variations in material between different production batches. Additionally, please take into consideration that PET panels have distinct left and right sides so always try to present only one side of the sheet. Due to the manufacturing process, the felt board may show differences in shade depending on the direction of laying. We recommend laying all pieces in one direction to avoid undesirable visual effects.This is particularly important to consider when installing larger structures, such as wall-mounted panels or acoustic drop ceiling.

© 2026 DeFelt Sp. z o.o. All Rights Reserved.
DeFelt® and GridVibe™ are registered trademarks of DeFelt Sp. z o.o.

DeFelt

Made in Poland